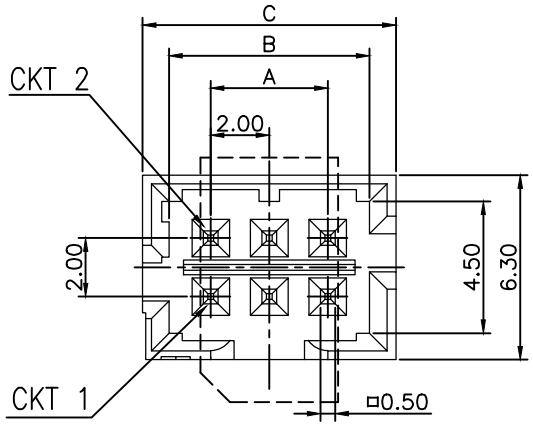

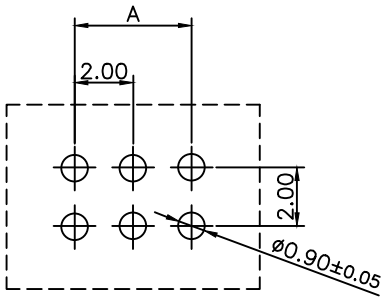

RECOMMENDED PCB LAYOUT
GENERAL TOLERANCE ±0.05

NOTES:
1. MATERIAL:
   1.1 HOUSING: THERMOPLASTIC, HIGH TEMP., UL94V-0; BLACK
   1.2 TERMINAL: COPPER ALLOY
2. FINISH: UNDERPLATING: 50~100u" NICKEL OVERALL.
   2.1 CONTACT AREA:
      1: G/F
      C: 15u" GOLD
      N:MATT TIN
      D: 30U'' GOLD
   2.2 SOLDER AREA
      MATTE TIN
3. REFLOW SOLDER CAPABLE TO 260°C PER ACES SPEC.
4. SPEC. PLS. REFER TO PS-51352-XXXXX-XXX
5. PART NUMBER

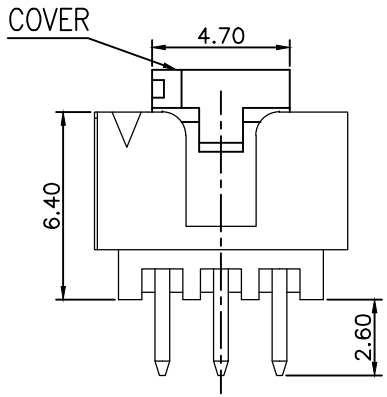

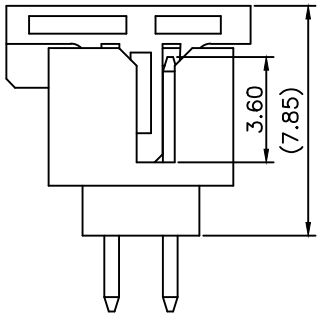

51382-XXX X X-XXX

CKTS

PACKING

PLATING

XXX	BOSS	COLOR	PACKING
004	NO	BLACK	51382-XXXXX-07-TRP

0:TAPE REEL
1:TUBE
7:TAPE&REEL WITH COVER
8:TUBE WITH COVER

1: G/F ON CONTACT
MATTE TIN ON SOLDER
C: 15U'' GOLD ON CONTACT
MATTE TIN ON SOLDER
D: 30U'' GOLD ON CONTACT
MATTE TIN ON SOLDER

N:MATT TIN

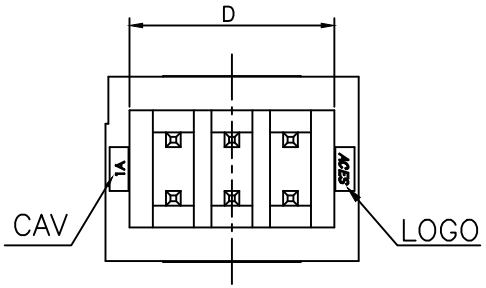

CKT	DIM A	DIM B	DIM C	DIM D
4	2.0	4.85	6.65	5.0
6	4.0	6.85	8.65	7.0
8	6.0	8.85	10.65	9.0
10	8.0	10.85	12.65	11.0
12	10.0	12.85	14.65	13.0

QUALITY SYMBOLS
MAJOR
CRITICAL

GENERAL TOLERANCES
(UNLESS SPECIFIED)
X. ±0.5
.X ±0.25
.XX ±0.15
.XXX ±0.1
ANGLES ±2°

DRAWN BY: Zhang,hongjun	DATE: 22'/10/28	ACES ELECTRONICS	
CHECKED BY: Lu, Jing Quan	DATE: 22'/10/28	TITLE: 2.0mm WTB WAFER CONN T/H D/R S/T TYPE.	
APPROVED BY: Chiu,Wenfu	DATE: 22'/10/28		
UNITS: mm		SIZE: A4	RFQ NO.: N/A
SCALE: 1 : 1	SHEET NO.: 1 OF 3	REV: C	DWG NO.: 51382-XXXXX-XXX

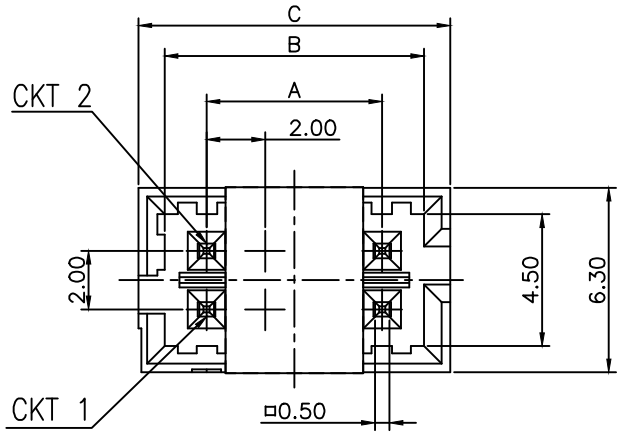

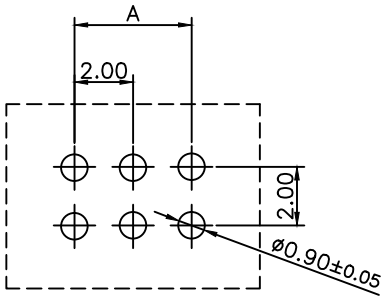

RECOMMENDED PCB LAYOUT
GENERAL TOLERANCE ±0.05

NOTES:
1. MATERIAL:
   1.1 HOUSING: THERMOPLASTIC, HIGH TEMP., UL94V-0; BLACK
   1.2 TERMINAL: COPPER ALLOY
2. FINISH: UNDERPLATING: 50~100u" NICKEL OVERALL.
   2.1 CONTACT AREA:
      1: G/F
      C: 15U" GOLD
      N:MATT TIN
      D: 30U" GOLD
   2.2 SOLDER AREA:
      MATTE TIN
3. REFLOW SOLDER CAPABLE TO 260°C PER ACES SPEC.
4. SPEC. PLS. REFER TO PS-51352-XXXXX-XXX
5. PART NUMBER

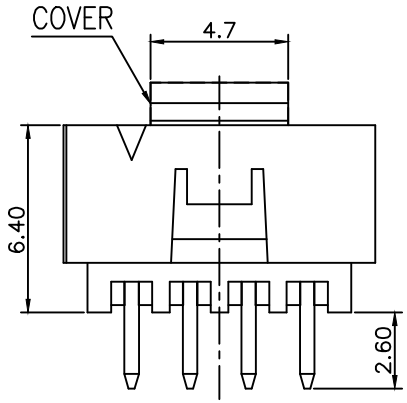

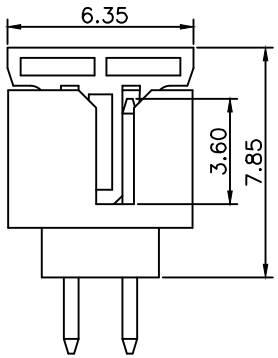

51382-XXX X X-XXX

NO OF CKT

PACKING
0:TAPE REEL
1:TUBE
7:TAPE&REEL WITH COVER
8:TUBE WITH COVER

PLATING
1: G/F ON CONTACT
MATTE TIN ON SOLDER
C: 15U" GOLD ON CONTACT
MATTE TIN ON SOLDER
D: 30U" GOLD ON CONTACT
MATTE TIN ON SOLDER

N:MATT TIN

XXX	BOSS	COLOR	PACKING
002	NO	BLACK	51382-XXXXX-01-TRP

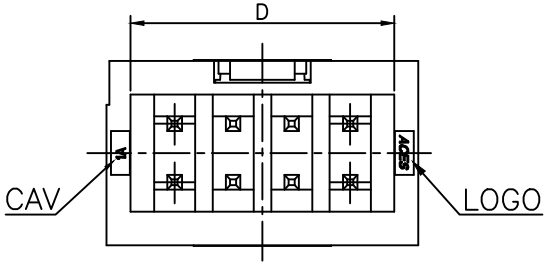

CKT	DIM A	DIM B	DIM C	DIM D
12	10.00	12.85	14.65	13.00

QUALITY SYMBOLS
MAJOR
CRITICAL

GENERAL TOLERANCES
(UNLESS SPECIFIED)
X. ±0.5
.X ±0.25
.XX ±0.15
.XXX ±0.1
ANGLES ±2°

DRAWN BY: Zhang,hongjun	DATE: 22'/10/28	ACES ELECTRONICS
CHECKED BY: Lu, Jing Quan	DATE: 22'/10/28	TITLE: 2.0mm WTB WAFER CONN T/H D/R S/T TYPE.
APPROVED BY: Chiu,Wenfu	DATE: 22'/10/28	
UNITS: mm		SIZE: A4 / RFQ NO.: N/A
SCALE: 1 : 1	SHEET NO.: 2 OF 3	REV: C / DWG NO.: 51382-XXXXX-XXX

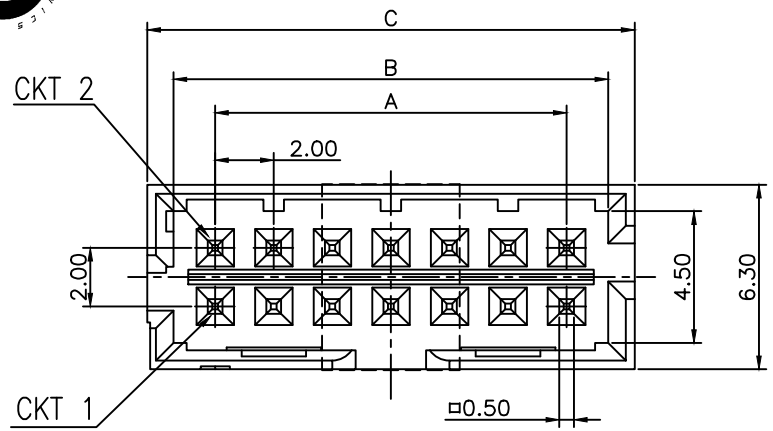

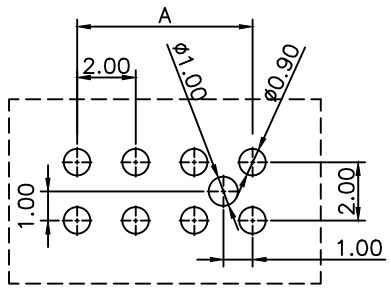

RECOMMENDED PCB LAYOUT
GENERAL TOLERANCE ±0.05

NOTES:
1. MATERIAL:
   1.1 HOUSING: THERMOPLASTIC, HIGH TEMP., UL94V-0; BLACK
   1.2 TERMINAL: COPPER ALLOY
2. FINISH: UNDERPLATING: 50~100u" NICKEL OVERALL.
   2.1 CONTACT AREA:
      1: G/F
      C: 15U" GOLD
      D: 30U" GOLD
      N:MATT TIN
   2.2 SOLDER AREA:
      MATTE TIN
3. REFLOW SOLDER CAPABLE TO 260°C PER ACES SPEC.
4. SPEC. PLS. REFER TO PS-51352-XXXXX-XXX
5. PART NUMBER

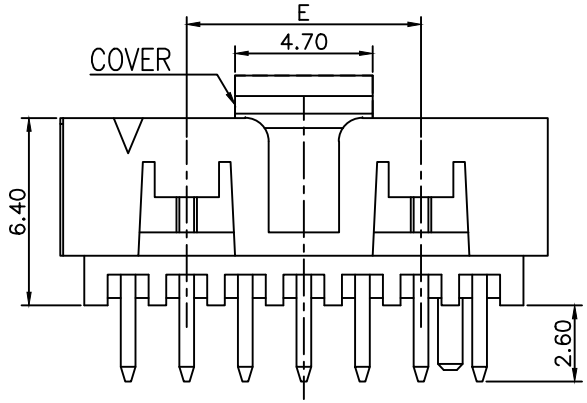

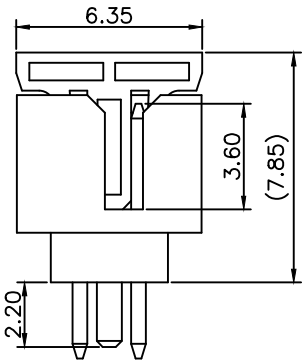

51382-XXX X X-XXX

CKTS

PACKING
0:TAPE REEL
1:TUBE
7:TAPE&REEL WITH COVER
8:TUBE WITH COVER

PLATING
1: G/F ON CONTACT
MATTE TIN ON SOLDER
C: 15U" GOLD ON CONTACT
MATTE TIN ON SOLDER
D: 30U" GOLD ON CONTACT
MATTE TIN ON SOLDER
N:MATT TIN

XXX	BOSS	PACKING	OMISSION CKT
001	N	51382-XXXXX-03-TRP	NA
002	N	51382-XXXXX-01-TRP	NA
003	N	51382-XXXXX-03-TRP	OMISSION14PIN
005	Y	51382-XXXXX-04-TRP	NA

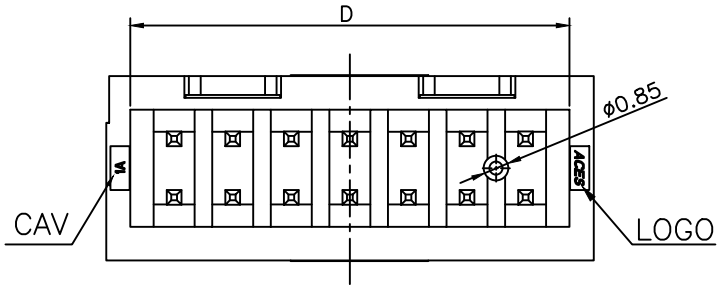

CKT	DIM A	DIM B	DIM C	DIM D	DIME
14	12.00	14.85	16.65	15.00	8.00
18	16.00	18.85	20.65	19.00	12.00
24	22.00	24.85	26.65	25.00	18.00
28	26.00	28.85	30.65	29.00	22.00

空PIN位置圖示

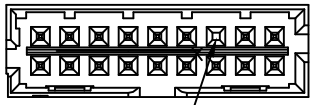

OMISSION 14PIN

QUALITY SYMBOLS
MAJOR
CRITICAL

GENERAL TOLERANCES
(UNLESS SPECIFIED)
X. ±0.5
.X ±0.25
.XX ±0.15
.XXX ±0.1
ANGLES ±2°

DRAWN BY: Zhang,hongjun	DATE: 22'/10/28	ACES ELECTRONICS
CHECKED BY: Lu, Jing Quan	DATE: 22'/10/28	TITLE: 2.0mm WTB WAFER CONN T/H D/R S/T TYPE.
APPROVED BY: Chiu,Wenfu	DATE: 22'/10/28	
UNITS: mm		SIZE: A4 / RFQ NO.: N/A
SCALE: 1 : 1	SHEET NO.: 3 OF 3	REV: C / DWG NO.: 51382-XXXXX-XXX

2019.09.02_REV.13